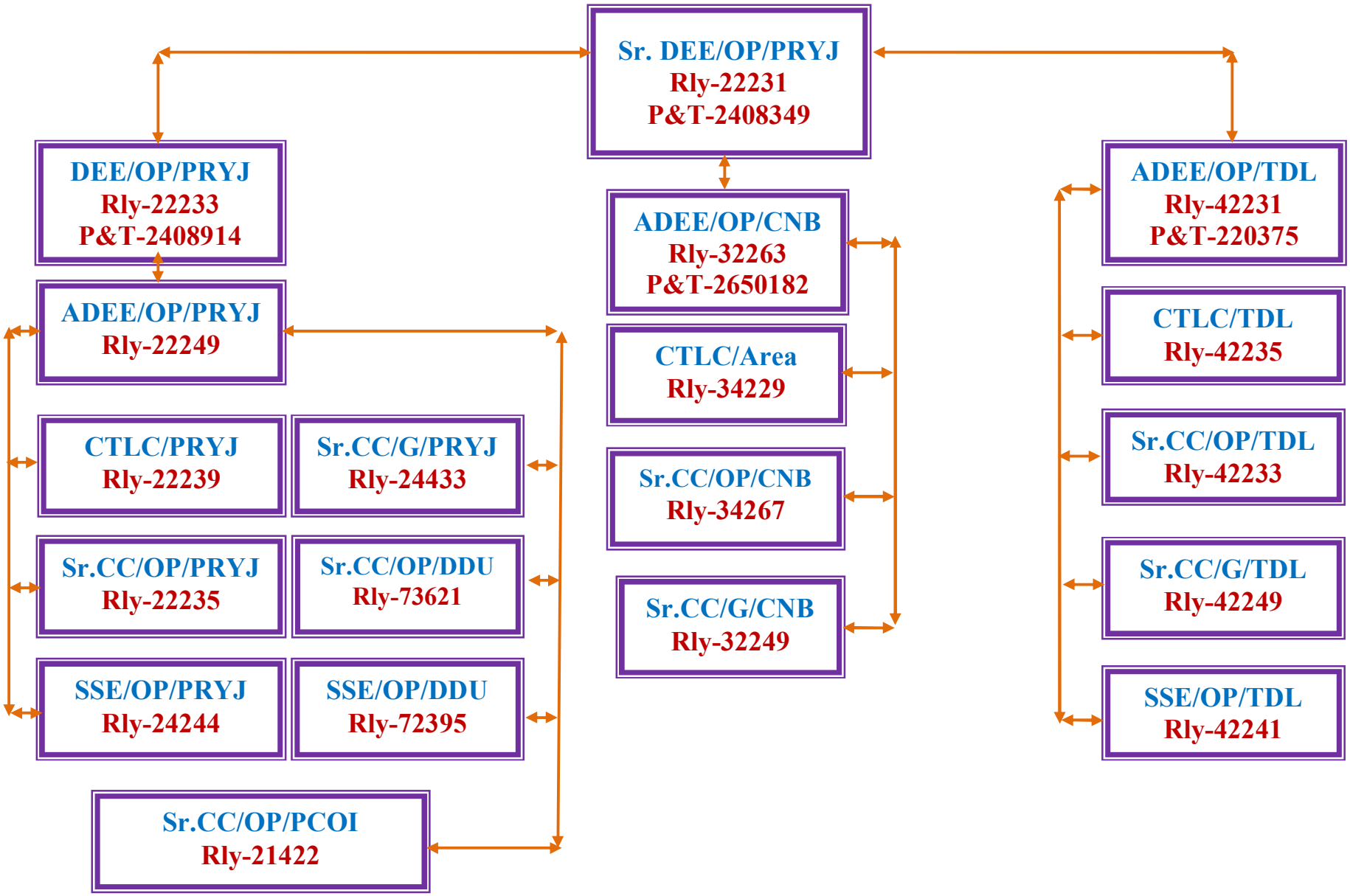# ELECTRIC OPERATION, PRAYAGRAJ ORGANIZATION CHART