DANKAUR
(EI)
'SPL ' CLASS STD IIIR

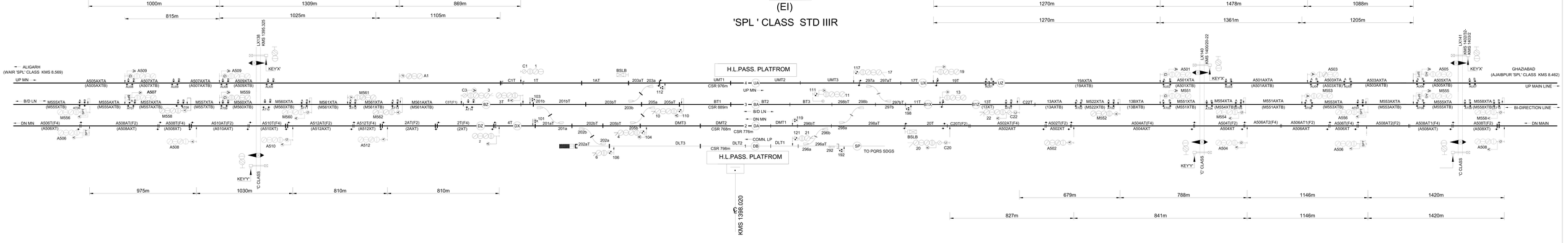

BASED UPON SIP NO.
SI-3255(PH) DT.11.02.2020