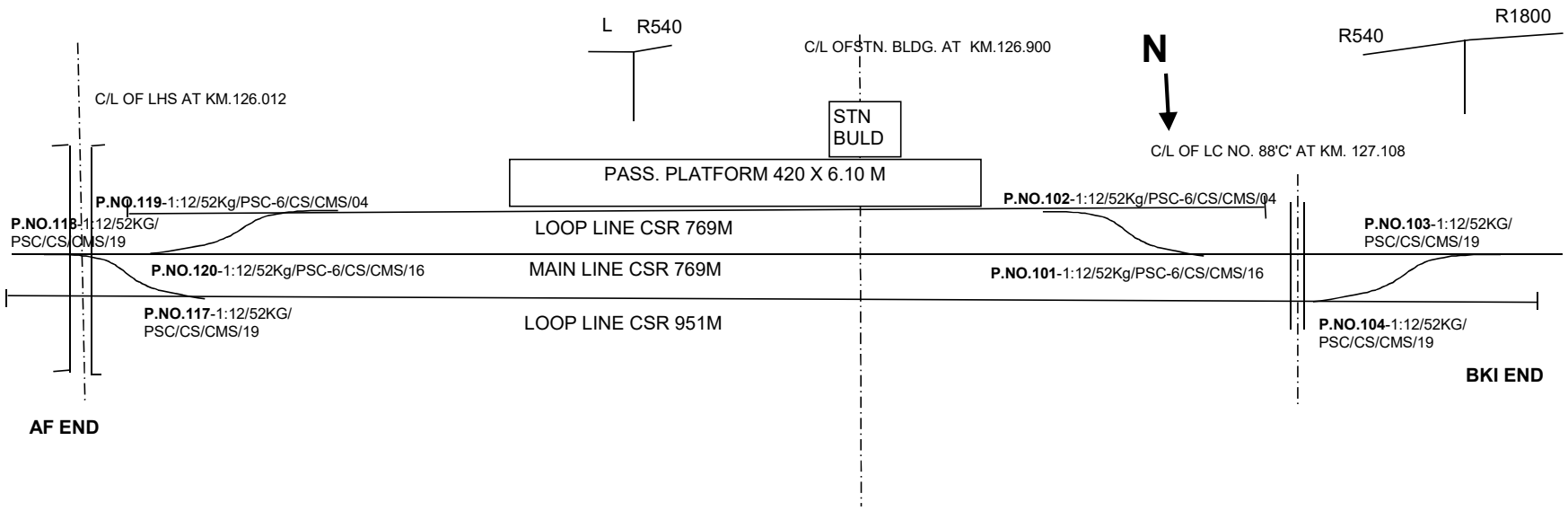

NORTH CENTRAL RAILWAY
AGRA DIVISION
AF-BKI SECTION
KARAN PURA
NOT TO SCALE

UPDATED UPTO 31.03.2021