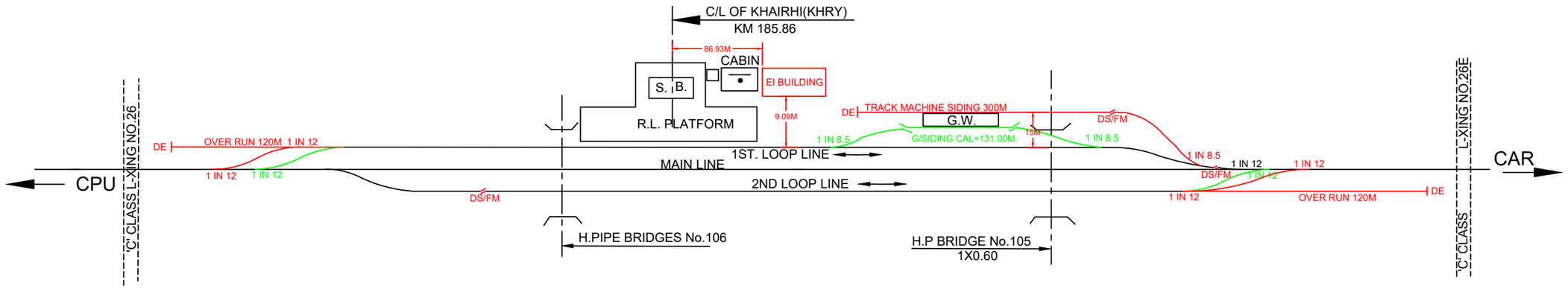

NORTH CENTRAL RAILWAY

PRAYAGRAJ DIVISION

CAR - CPU SECTION

KHAIRAHI (KHRY) STATION

NOT TO SCALE